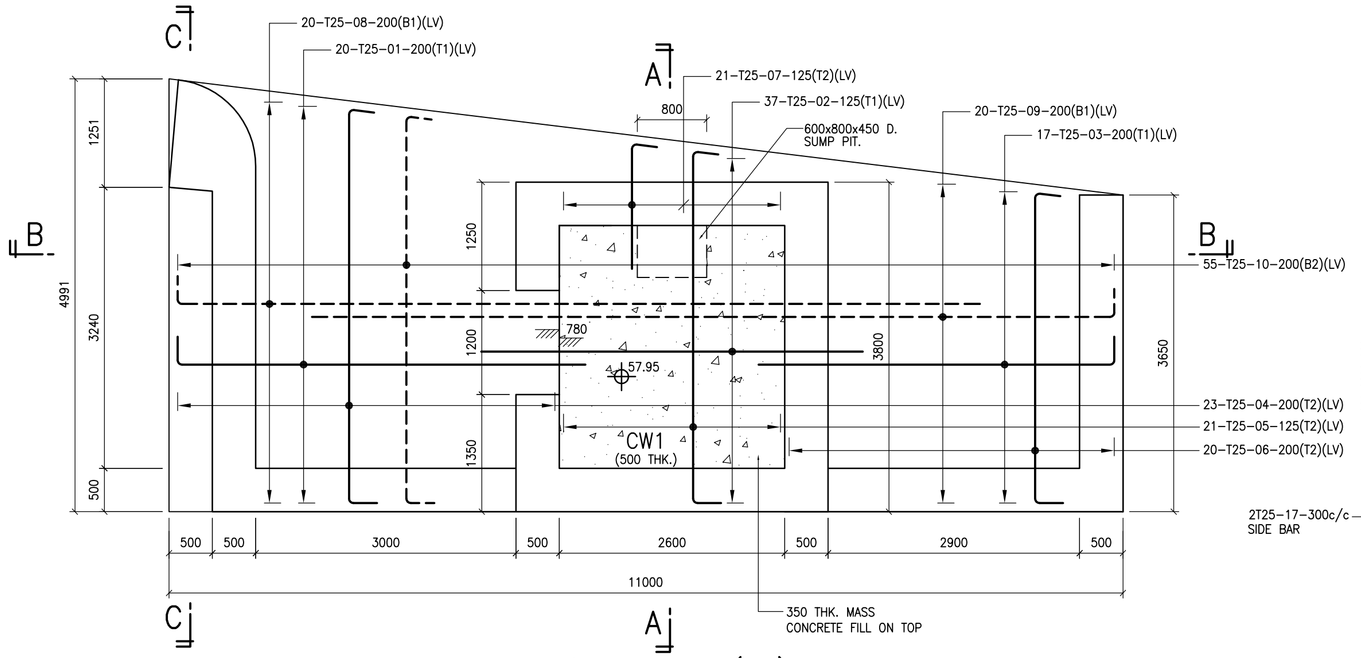

FOOTING PLAN (F1)

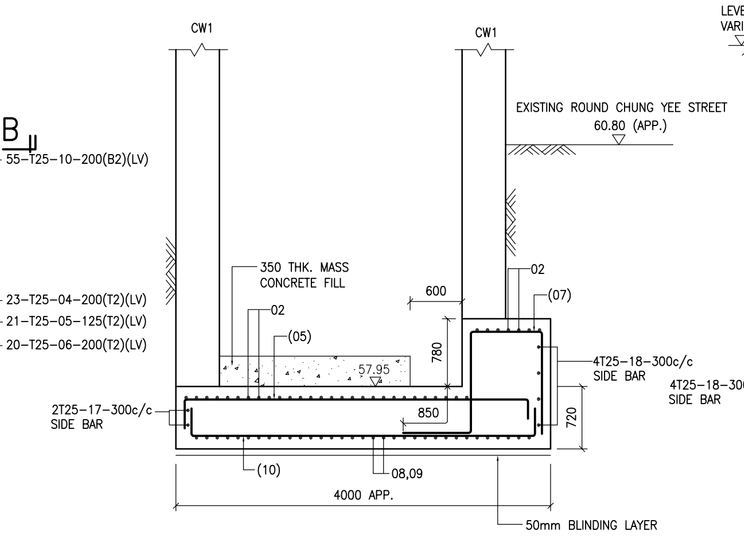

SECTION A – A

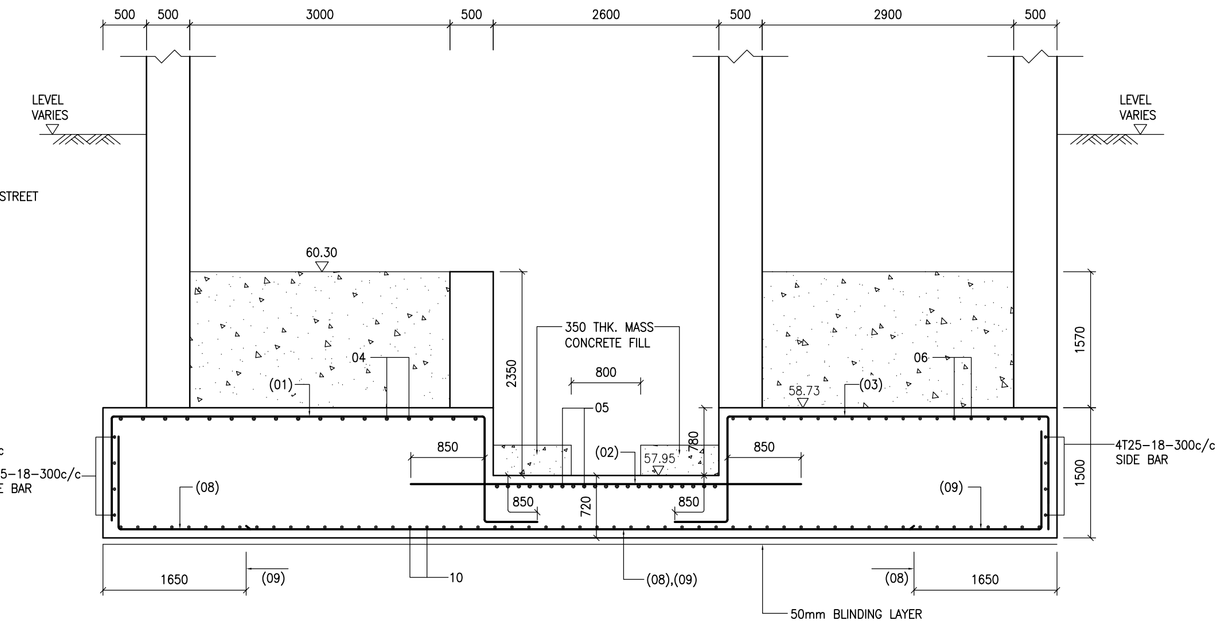

SECTION B – B

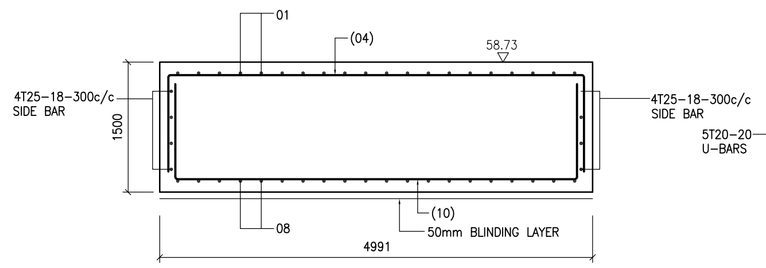

SECTION C – C

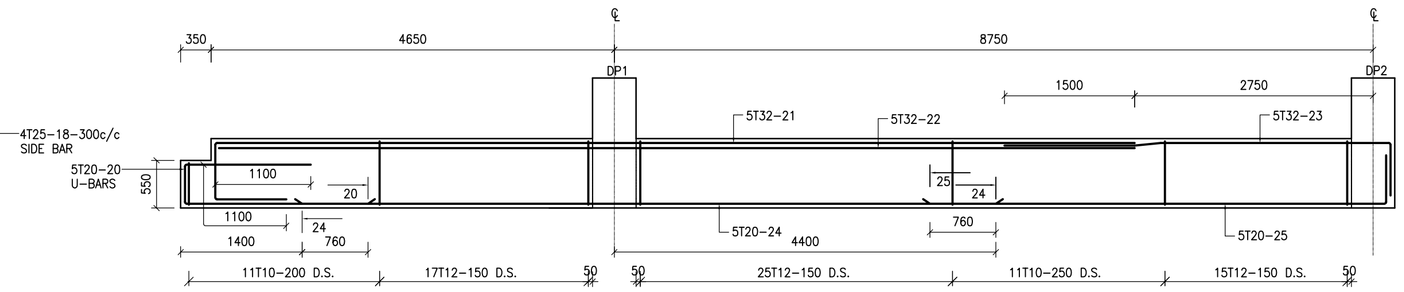

DCB1 (800/550x600)

DB2 (800x600)

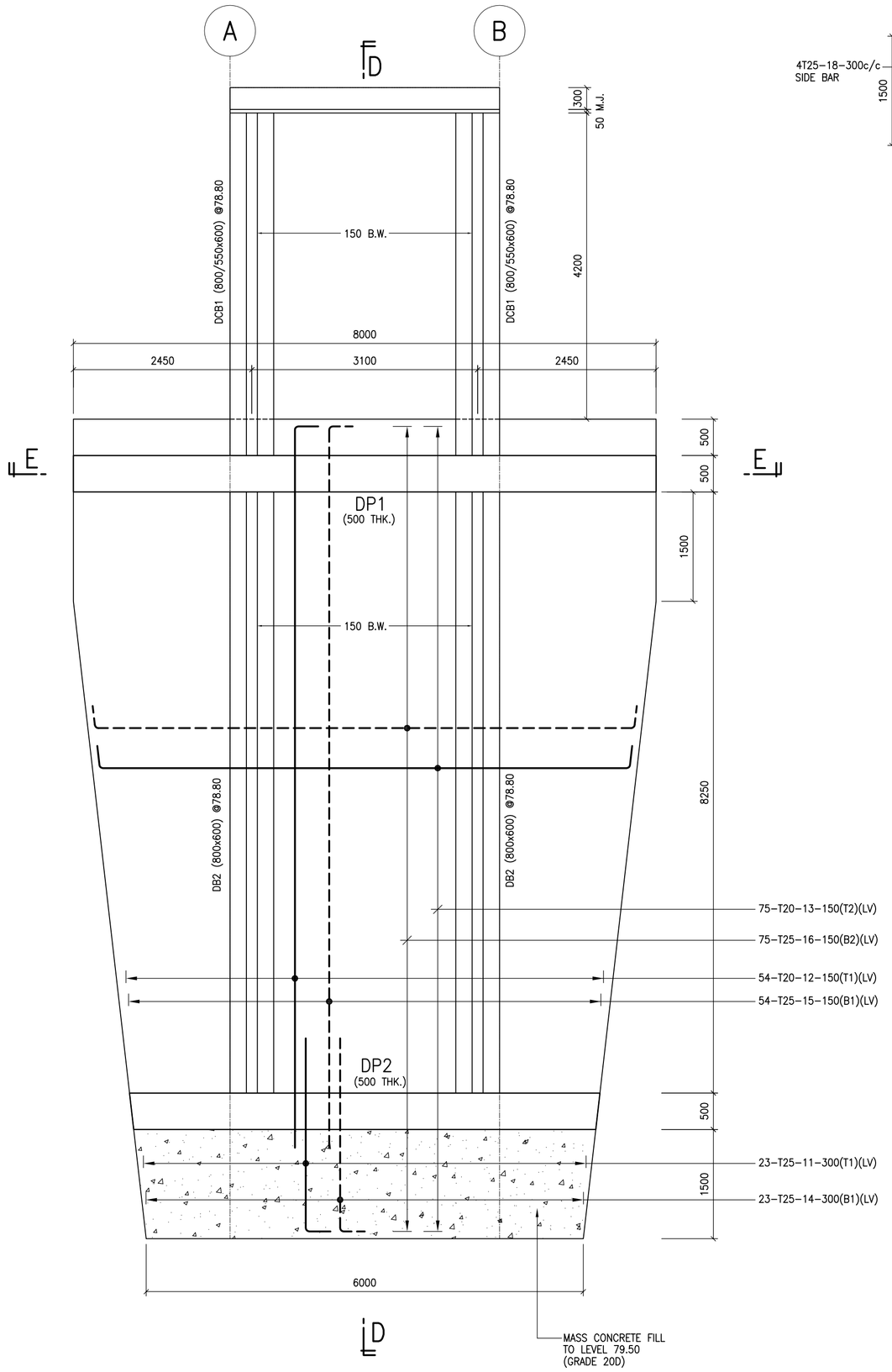

FOOTING PLAN (F2)

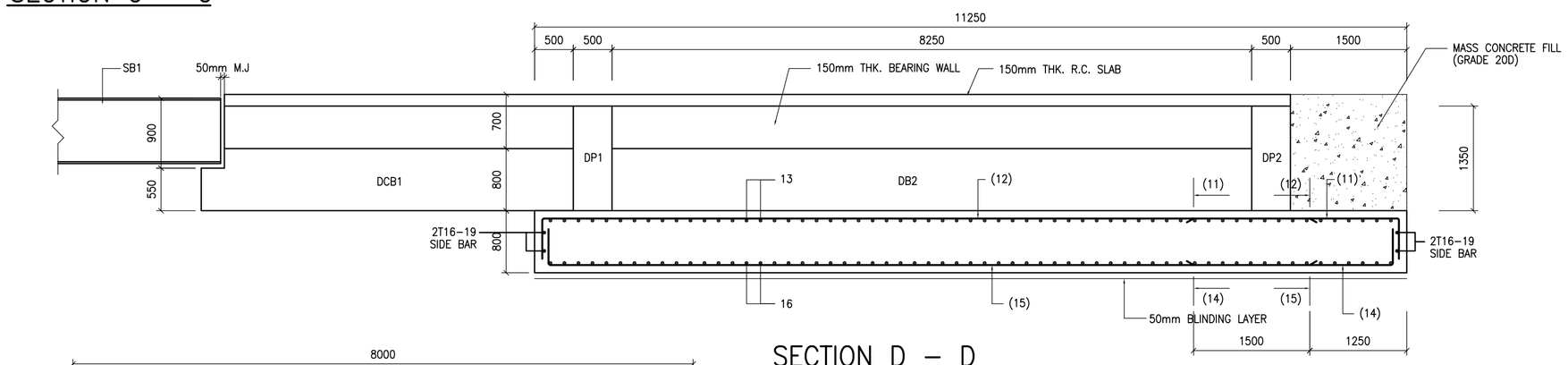

SECTION D – D

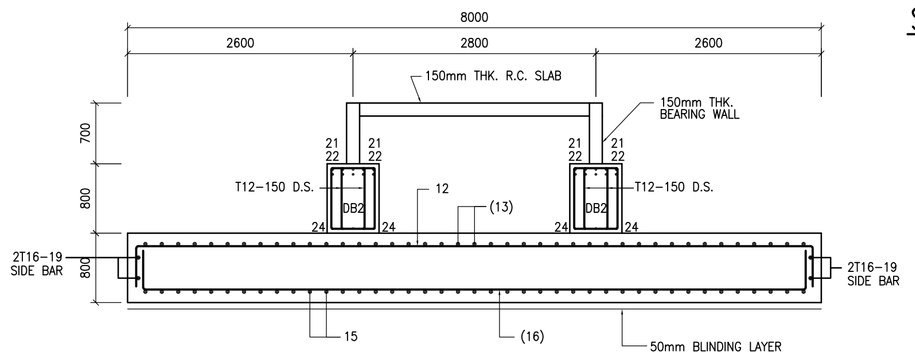

SECTION E – E

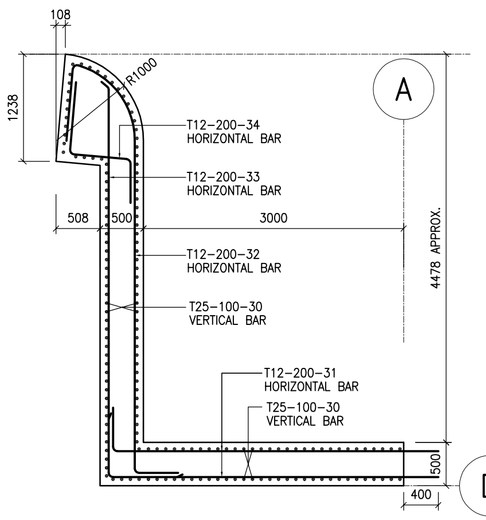

DETAIL FOR SW1

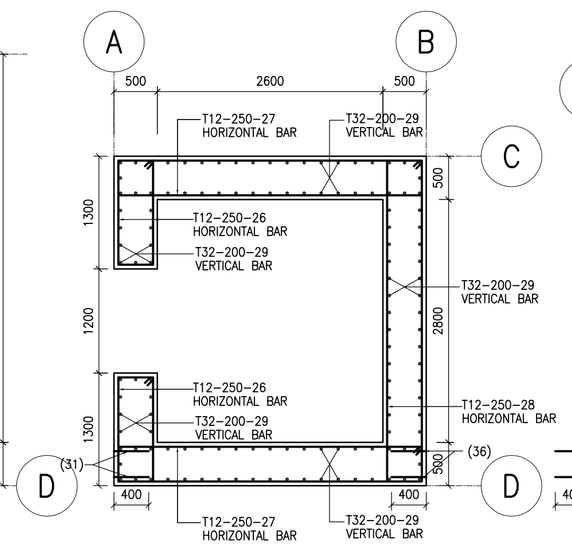

DETAIL FOR CW1

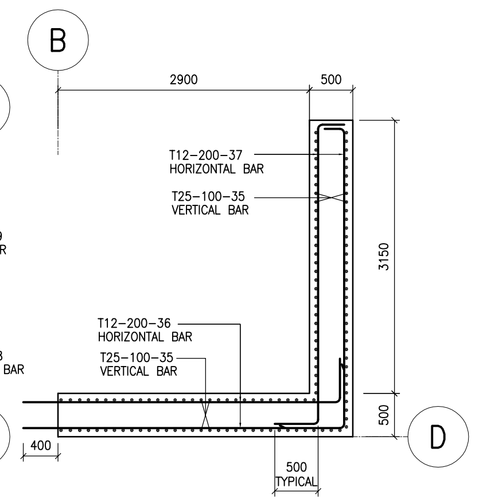

DETAIL FOR SW2

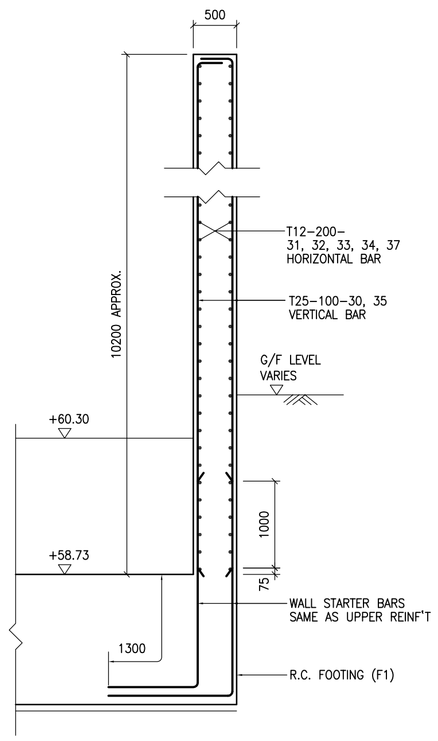

TYPICAL SCREEN WALL DETAIL FOR SW1 AND SW2

NOTES FOR R.C. FOOTING

1. DESIGN TO COMPLY WITH :–
   a. HONG KONG BUILDING (CONSTRUCTION) REGULATION, 1990
   b. CODE OF PRACTICE FOR FOUNDATION
   c. THE STRUCTURAL USE OF CONCRETE, 2004
2. FOR GENERAL NOTES, PLEASE REFER DWG. NO. LP001.
3. CONCRETE COVER TO MAIN REINFORCEMENT :
   FOOTING : 50mm
4. ALLOWABLE BEARING CAPACITY OF SOIL TO BE :
   FOR LIFT TOWER = 200 kPa
   FOR FOOTBRIGE = 100 kPa
5. GRADE 35D/20 CONCRETE SHALL BE USED FOR ALL PAD FOOTINGS.

No.	Date	Description	Initial
	05/01/12	TENDER DRAWING	

Revision

Architect
ARTHUR C. S. KWOK
郭志錄建築師有限公司
1401 ARGYLE CENTRE ONE KOWLOON

TEAM 73 HK Limited
urban design urban planning landscape architecture
8/F China Hong Kong Tower 8 Hennessy Road Wanchai Hong Kong
Tel: 2865-5713 Fax: 2865-4809 Email: design@team-73.com

THOMAS ANDERSON & PARTNERS (H.K.) LIMITED
CONSULTING ENGINEERS, BUILDING SERVICES

Engineer
CANWEST CONSULTANTS LIMITED
CIVIL & STRUCTURAL ENGINEERS
建偉工程顧問有限公司
15/F, 633 KING'S ROAD, NORTH POINT, HONG KONG
TEL: (852) 2892 1126
FAX: (852) 2881 6365
E-MAIL: canwest@canwest.biz.com.hk

	Name	Date
Designed	FRANKIE YUEN	03/2010
Drawn		03/2010
Checked	RICKY WONG	03/2010

Approved
Chief structural engineer
Senior structural engineer
Project engineer
Signed Date

Contract No.
9AS022

File No.

Project No.
420 R0

Contract
LOCAL OPEN SPACE AT CHUNG YEE STREET, KOWLOON CITY DISTRICT

Drawing Title
PROPOSED LIFT TOWER AND FOOTBRIDGE – FOOTING, CORE WALL AND BEAM DETAILS

Drawing No.
SE/2263/NTSW004
file name.

Scale
1 : 50

ARCHITECTURAL SERVICES DEPARTMENT

Cad Ref: