MEMBER SCHEDULE FOR (BLOCK 3)

MARK	SECTION	GRADE
3–B1	100x50x8 RHS.	S275
3–B2	150x100x8 RHS.	S275
3–C1 ~ 3–C4	203x203x46kg/m UC	S275

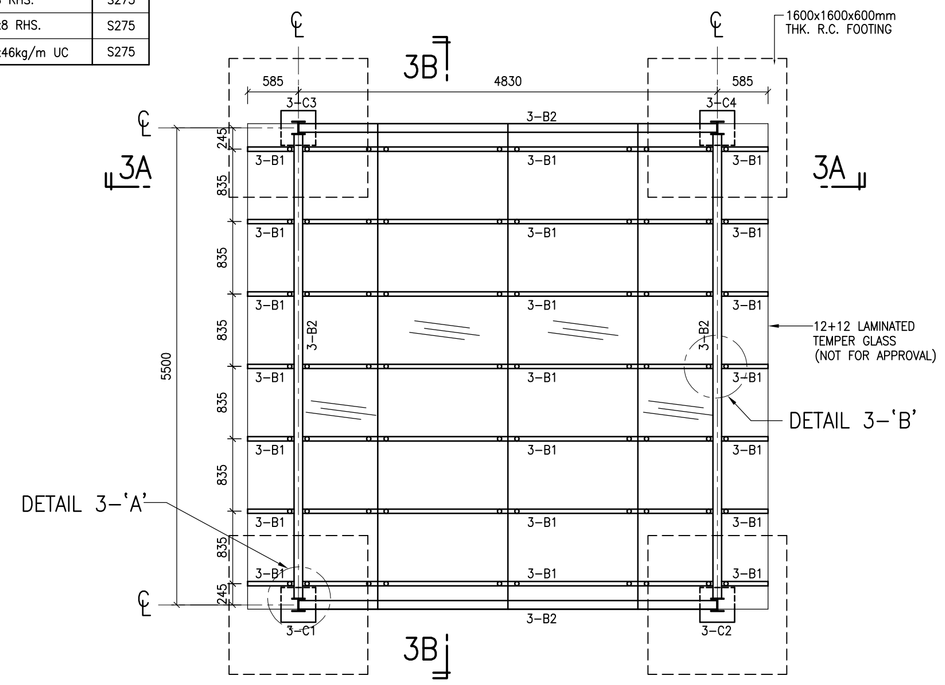

STEEL FRAME LAYOUT PLAN OF PAVILION (BLOCK 3)
1 : 50

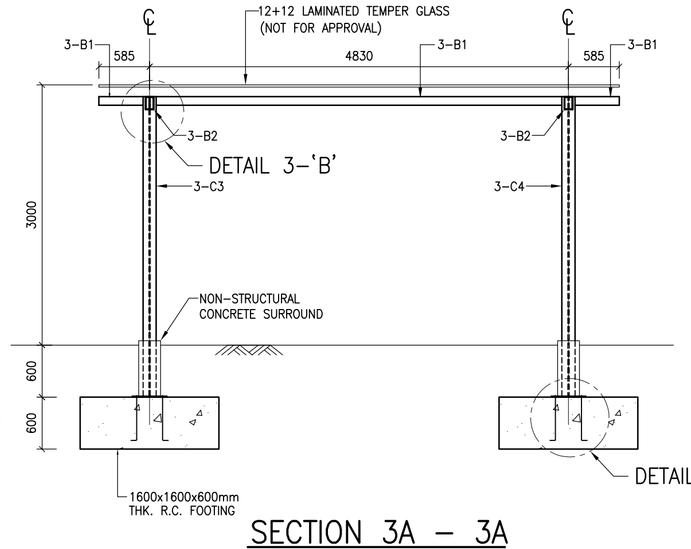

SECTION 3A – 3A
1 : 50

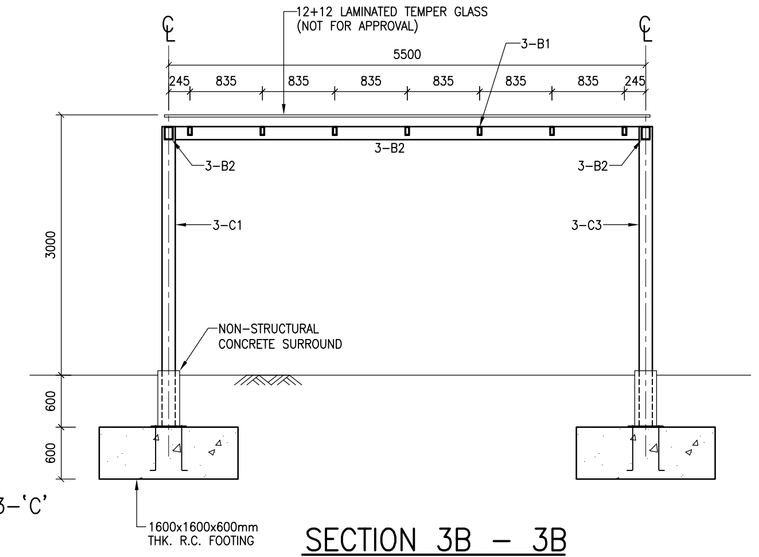

SECTION 3B – 3B
1 : 50

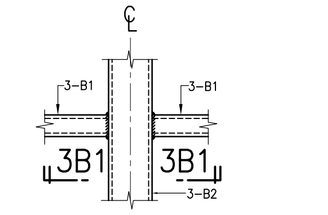

DETAIL 3–'B'
1 : 10
(TYPICAL CONNECTION 3–B1 TO 3–B2)

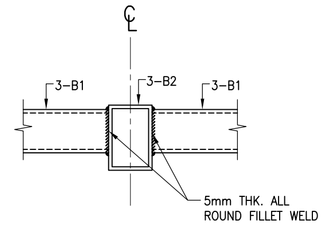

SECTION 3B1 – 3B1
1 : 10

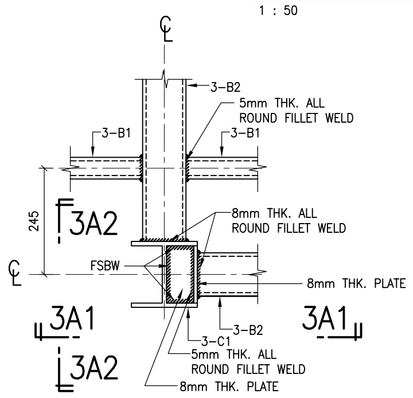

DETAIL 3–'A'
1 : 10

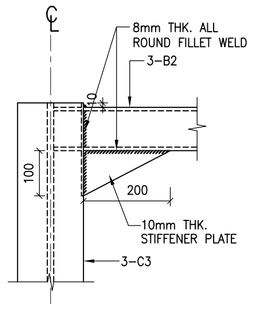

SECTION 3A1 – 3A1
1 : 10
(TYPICAL CONNECTION 3–B2 TO WEB OF POST)

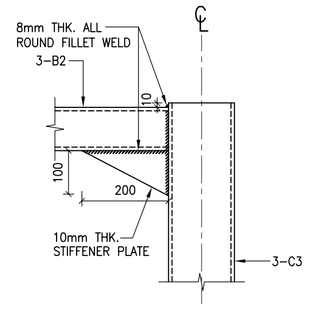

SECTION 3A2 – 3A2
1 : 10
(TYPICAL CONNECTION 3–B2 TO WEB OF POST)

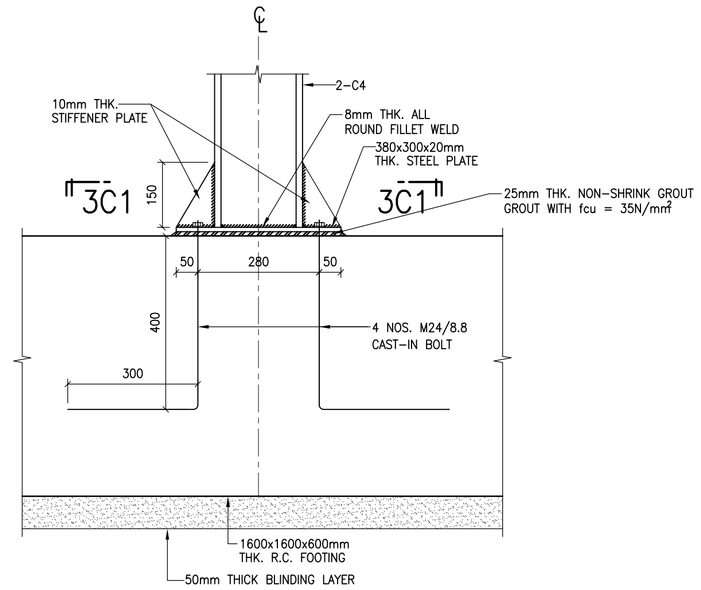

DETAIL 3–'C'
1 : 10

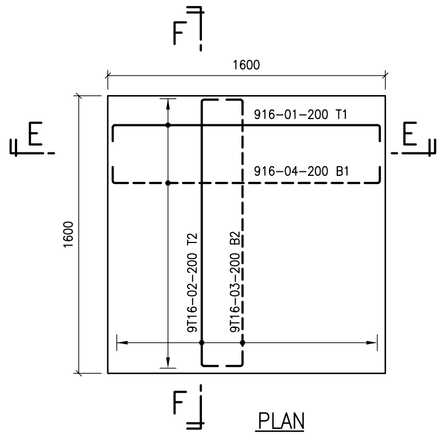

PLAN

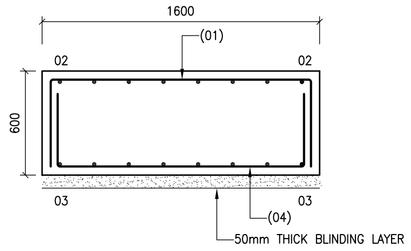

SECTION E – E

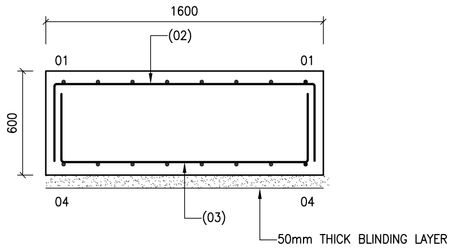

SECTION F – F

PROPOSED 1600x1600x600mm THICK R.C. FOOTING (BLOCK 3)
1 : 25

MEMBER SCHEDULE FOR (BLOCK 4)

MARK	SECTION	GRADE
4–B1	100x50x8 RHS.	S275
4–B2	100x50x6.3 RHS.	S275
4–B3	200x100x10 RHS.	S275
4–C1 ~ 4–C5	203x203x46kg/m UC	S275

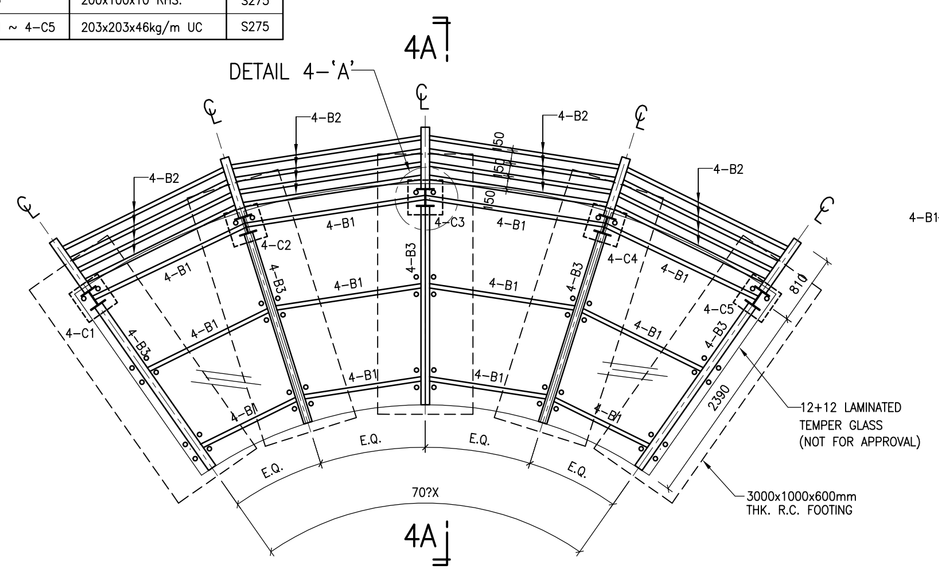

STEEL FRAME LAYOUT PLAN OF CURVED ARBOUR (BLOCK 4)

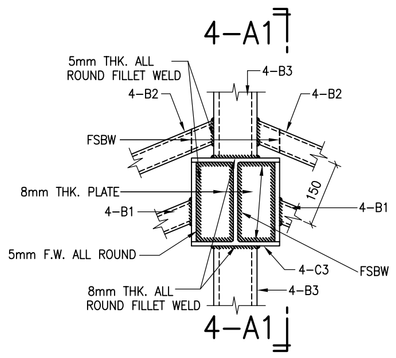

DETAIL 4–'A'
1 : 10

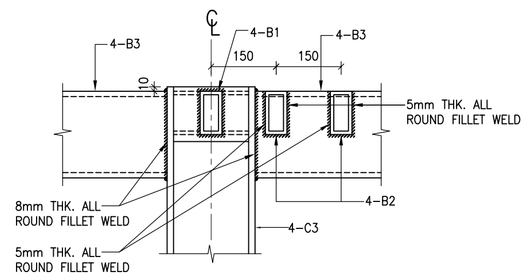

SECTION 4–A1 – 4–A1
1 : 10

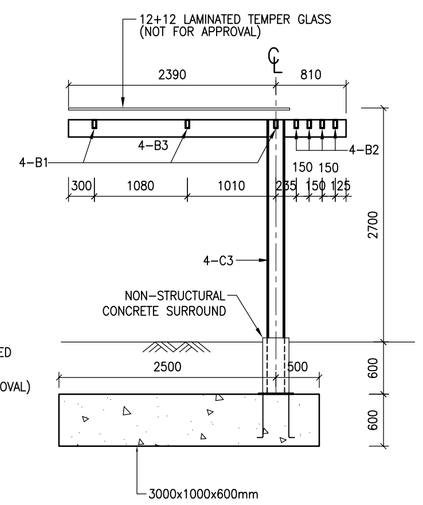

SECTION 4A – 4A

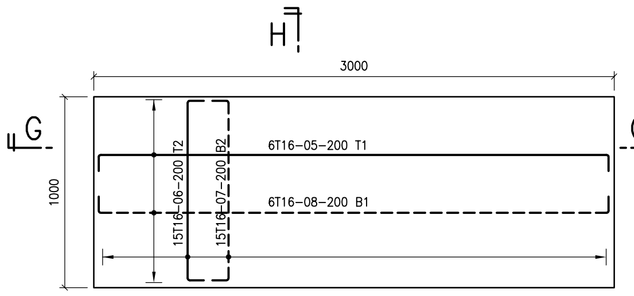

PLAN

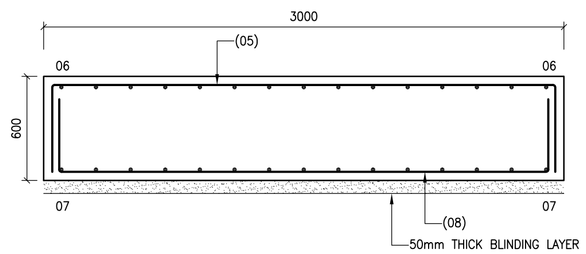

SECTION G – G

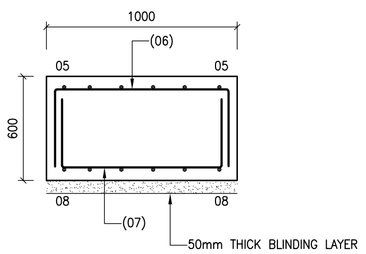

SECTION H – H

PROPOSED 3000x1000x600mm THICK R.C. FOOTING (BLOCK 4)
1 : 25

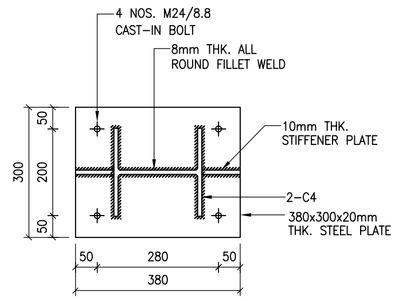

SECTION 3C1 – 3C1
1 : 10

No.	Date	Description	Initial
	05/01/12	TENDER DRAWING	

Revision

Architect
ARTHUR C. S. KWOK
ARCHITECTS & ASSOCIATES LIMITED
郭志錄建築師有限公司
1401 ARGYLE CENTRE ONE KOWLOON

TEAM 73 HK Limited
urban design urban planning landscape architecture
8/F China Hong Kong Tower 8 Hennessy Road Wanchai Hong Kong
Tel: 2865–5713 Fax: 2865–4809 Email: design@team–73.com

THOMAS ANDERSON & PARTNERS (H.K.) LIMITED
CONSULTING ENGINEERS, BUILDING SERVICES

Engineer
CANWEST CONSULTANTS LIMITED
CIVIL & STRUCTURAL ENGINEERS
建偉工程顧問有限公司
15/F, 633 KING'S ROAD, NORTH POINT, HONG KONG
TEL: (852) 2892 1126
FAX: (852) 2881 6365
E-MAIL: canwest@canwest.biz.com.hk

	Name	Date
Designed	DICK LEUNG	08/2008
Drawn	BAN WONG	08/2008
Checked	QUEENCY KUO	08/2008

Approved
Chief structural engineer
Senior structural engineer
Project engineer
Signed Date

Contract No.
9AS022

File No.

Project No.
420 RO

Contract
LOCAL OPEN SPACE AT CHUNG YEE STREET, KOWLOON CITY DISTRICT

Drawing Title
PAVILION (BLOCK 3) AND CURVED ARBOUR (BLOCK 4) STEEL FRAME LAYOUT PLAN, DETAILS, SECTION AND FOOTING R.C. DETAILS

Drawing No.
SE/2263/NTSW003
file name.

Scale
AS SHOWN

ARCHITECTURAL SERVICES DEPARTMENT

Cad Ref: