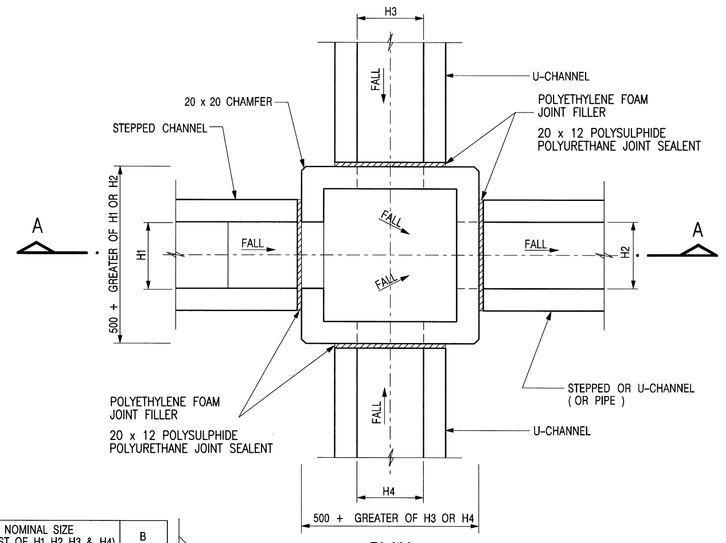

PLAN

NOMINAL SIZE (LARGEST OF H1, H2, H3 & H4)	B
300 – 600	150
675 – 900	175

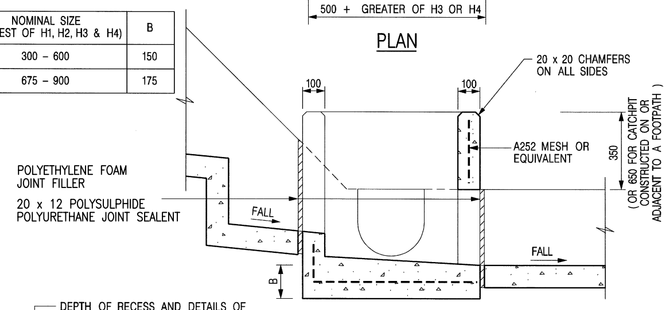

SECTION A – A

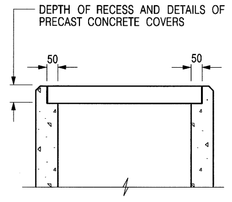

TOP SECTION FOR PRECAST CONCRETE COVERS

STANDARD CATCHPIT DETAILS (N.T.S.)

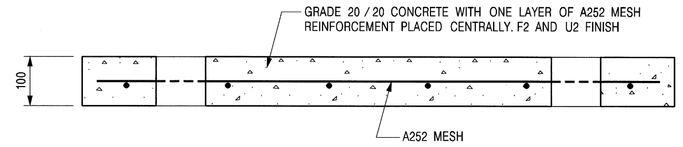

SECTION A – A

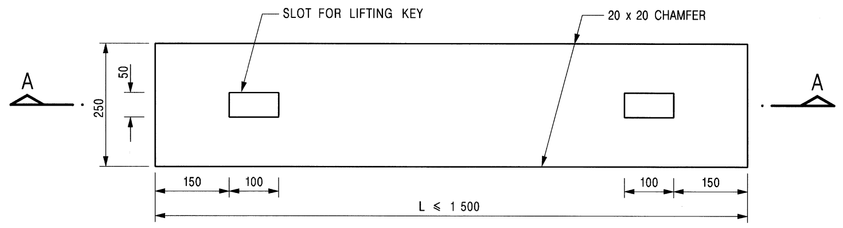

PLAN

TYPE 1 – FOR SPAN UP TO 1.5 m

NOTES:

1. ALL EXTERNAL EDGES OF COVERS SHALL BE 20mm CHAMFERED.

DETAILS OF CATCHPIT COVER
(N.T.S.)

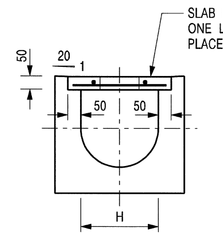

TYPICAL SECTION

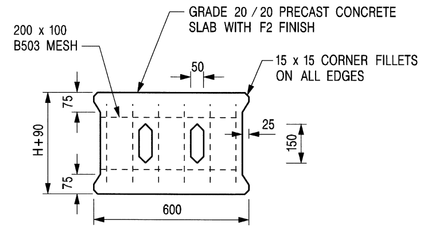

PLAN OF SLAB

U-CHANNELS WITH PRECAST CONCRETE SLABS
(UP TO H OF 525)

DETAILS OF CHANNEL COVER
(N.T.S.)

GENERAL NOTES FOR DRAINAGE

1 ALL CONCRETE SHALL BE GRADE 30D/20.
2 CONCRETE SURFACE FINISH SHALL BE CLASS U2 OR F2 AS APPROPRIATE.
3 SPACING OF EXPANSION JOINT IN CHANNELS SHALL BE 10m max.
4 ALL MANHOLE, SANDTRAP AND CATCHPIT SHALL BE RESTED ON SOIL.

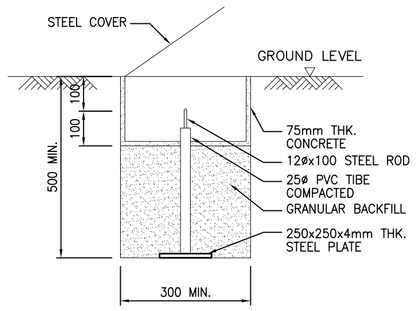

SETTLEMENT CHECKPOINT ON GROUND
N.T.S.

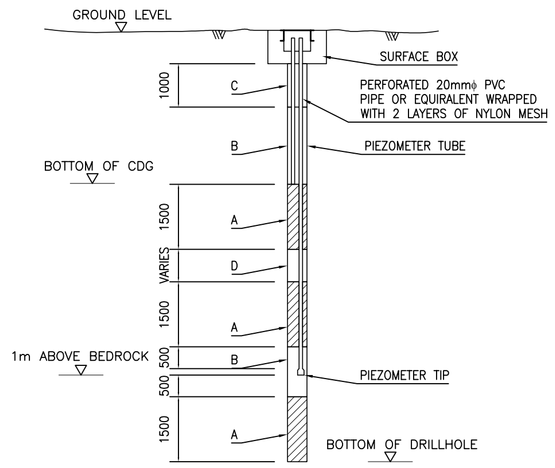

PIEZOMETER / STANDPIPE DETAILS
N.T.S.

A = BENTONITE
B = SAND FILTER
C = 11 CEMENT – BENTONITE GROUT
D = BACKFILL

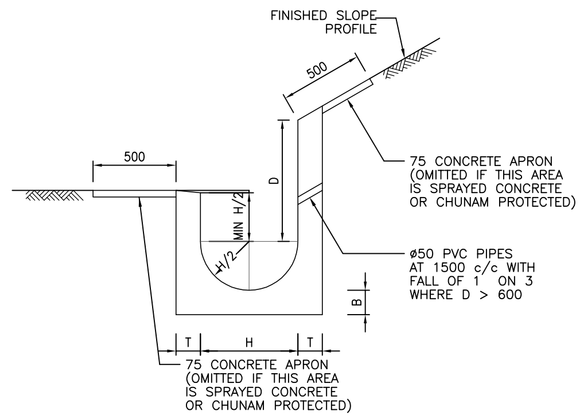

J–CHANNEL NOT CONSTRUCTED ON BERM

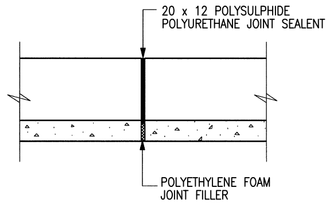

SECTION C – C

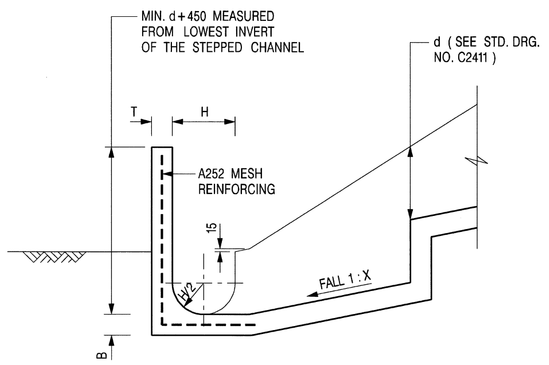

SECTION A – A

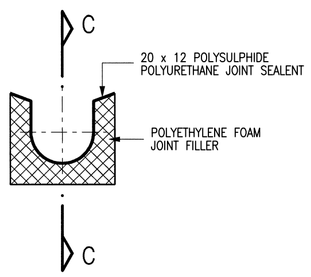

SECTION B – B
(DETAILS OF EXPANSION JOINT)

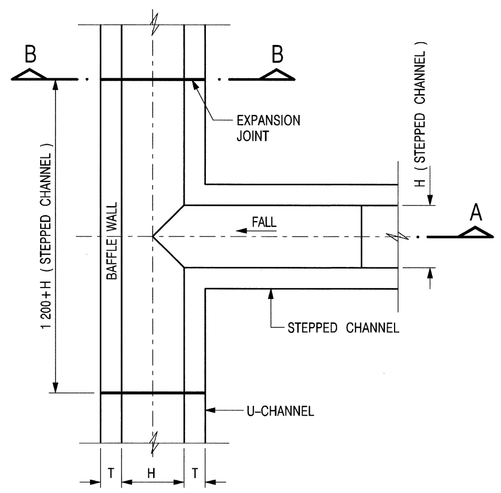

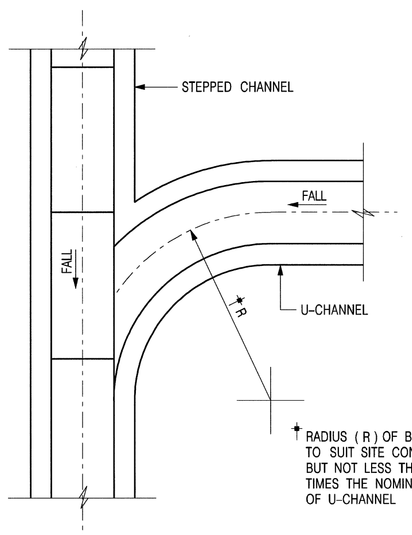

NOTES:

1. ALL DIMENSIONS ARE IN MILLIMETRES.
2. EXPANSION JOINTS SHALL BE PROVIDED AT A MAXIMUM INTERVAL OF 10 METRES.
3. CONCRETE SURFACE SHALL BE CLASS U2 OR F2 AS APPROPRIATE.
4. FOR DIMENSIONS B, T, H AND d, REFER TO RELEVANT CHANNEL DETAIL DRAWINGS.
5. 20 ≤ X ≤ 50 UNLESS OTHERWISE SPECIFIED.

DETAILS OF JUNCTION OF STEPPED CHANNEL (N.T.S.)

NOTES ON MONITORING

1. ALL CHECK POINTS AND EXISTING PIEZOMETER SHALL BE INSTALLED AND INITIAL READINGS SHALL BE TAKEN AND SUBMITTED TO THE SO PRIOR TO WORKS.
2. DURING THE PROGRESS OF THE CONSTRUCTION, THE CHECK POINTS AND EXISTING PIEZOMETER SHALL BE MONITORED DAILY. ALL READINGS SHALL BE KEPT ON SITE AND THE RECORD SHALL BE SUBMITTED TO THE SO WEEKLY.
3. SHOULD ANY SETTLEMENT AND DRAWDOWN EXCEED 25mm AND 1m RESPECTIVELY, ALL WORKS SHOULD BE CEASED AND THE ENGINEER SHALL BE INFORMED IMMEDIATELY. WORKS SHALL NOT RE–COMMENCE UNTIL REMEDIAL PROPOSAL HAVE BEEN SUBMITTED TO SO AND FOUND TO BE SATISFACTORY.
4. ALL CHECKPOINTS SHOULD BE KEPT IN GOOD CONDITION AND SHALL BE REPAIRED OR REINSTALLED IMMEDIATELY IF FOUND NECESSARY.

a) ALERT LEVEL – WHEN THE MEASURED RESULTS SETTLEMENT EXCEEDS 8mm, THE DESIGNER AND SO SHOULD BE ALERTED OF THE MONITORING AND MORE CHECK POINTS/ FREQUENCY OF MONITORING SHOULD BE IMPLEMENTED IN THE SO'S DIRECTION.

b) ALARM LEVEL – WHEN THE MEASURED SETTLEMENT EXCEEDS 12mm, THE DESIGN ASSUMPTION SHOULD BE REVIEWED AND IF ANY VARIATIONS ARISE, THE DESIGN SHOULD BE AMENDED AND SUBMITTED TO THE SO FOR APPROVAL.

c) ACTION LEVEL – WHEN THE MEASURED SETTLEMENT EXCEEDS 25mm, INFORM AP/RSE IMMEDIATELY. THE WHOLE WORKS SHOULD BE SUSPENDED IMMEDIATELY AND THE EXCAVATED AREA SHOULD BE BACKFILLED TO A SAFE LEVEL DETERMINED BY THE SO ON SITE. THE WORK SHOULD NOT BE RESUMED UNTIL THE MITIGATION MEASURES HAVE BEEN APPROVED BY SO.

Notes :

No.	Date	Description	Initial
	05/01/12	TENDER DRAWING	

Revision

Consultant Project No.
8165

ARTHUR C. S. KWOK
ARCHITECTS & ASSOCIATES LIMITED
郭志錄建築師有限公司
1401 ARGYLE CENTRE ONE KOWLOON

TEAM 73 HK Limited
urban design urban planning landscape architecture
8/F China Hong Kong Tower 8 Hennessy Road Wanchai Hong Kong
Tel: 2865-5713 Fax: 2865-4809 Email: design@team-73.com

CANWEST CONSULTANTS LIMITED
CIVIL & STRUCTURAL ENGINEERS
建偉工程顧問有限公司
15/F, 633 KING'S ROAD, NORTH POINT, HONG KONG
TEL: (852) 2892 1126
FAX: (852) 2881 6360
E-MAIL: canwest@canwest.biz.com.hk

THOMAS ANDERSON & PARTNERS (H.K.) LIMITED
CONSULTING ENGINEERS, BUILDING SERVICES

	Name	Signed	Date
Designed			
Drawn			
Checked			
Approved			

Contract No.

File No.

Project No.
420 RO

Consultant Agreement No.
9AS022

Contract
LOCAL OPEN SPACE AT CHUNG YEE STREET, KOWLOON CITY DISTRICT

Drawing Title
TYPICAL DETAILS

Drawing No.
SE/2263/NTSF010

Scale
AS SHOWN

(Date)

ARCHITECTURAL SERVICES DEPARTMENT