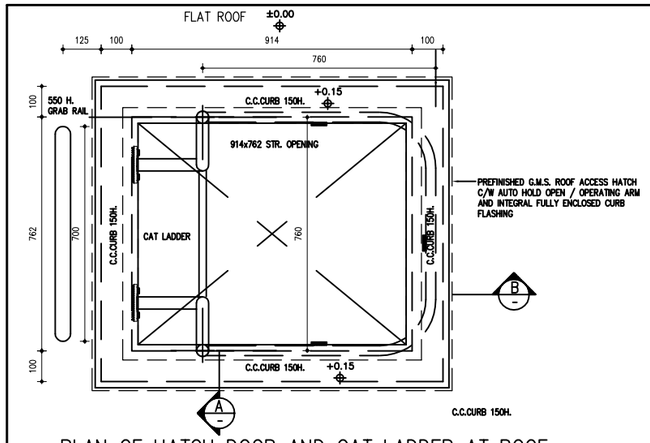

PLAN OF HATCH DOOR AND CAT LADDER AT ROOF
A1=1:10, A3=1:20

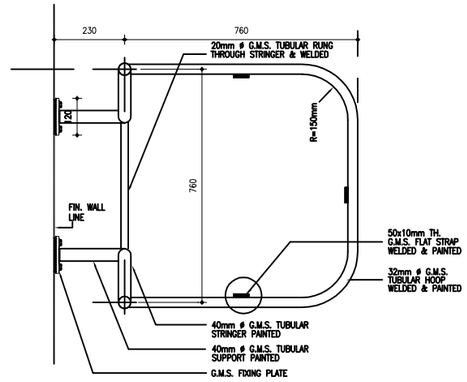

3 DETAIL 3
A1=1:10, A3=1:20

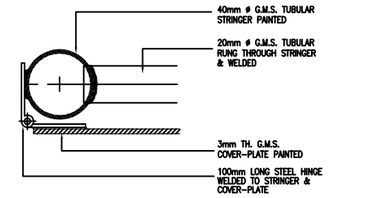

5 DETAIL 5
A1=1:2, A3=1:4

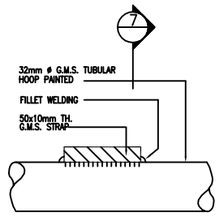

7 DETAIL 7
A1=1:2, A3=1:4

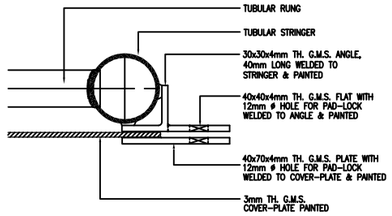

6 DETAIL 6
A1=1:2, A3=1:4

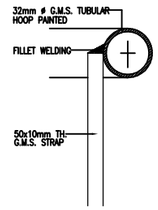

8 DETAIL 8
A1=1:2, A3=1:4

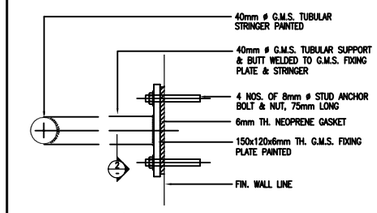

1 DETAIL 1
A1=1:5, A3=1:10

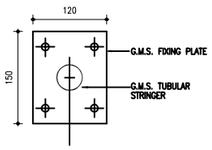

2 DETAIL 2
A1=1:5, A3=1:10

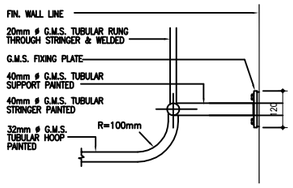

4 DETAIL 4
A1=1:10, A3=1:20

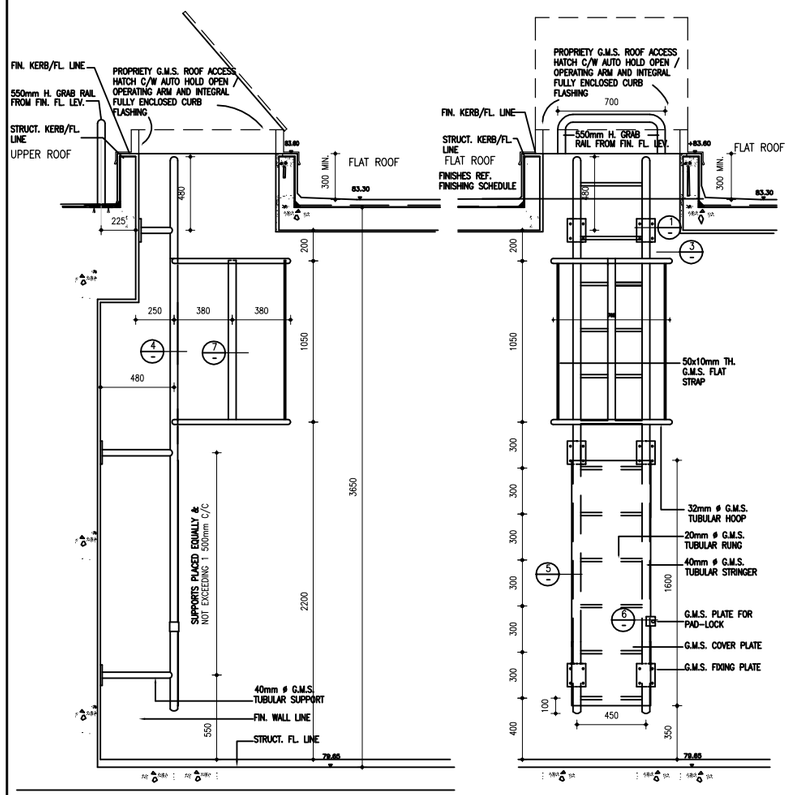

SIDE ELEVATION FRONT ELEVATION

TYPICAL DETAIL OF CAT LADDER 1
A1=1 : 20, A3=1 : 40

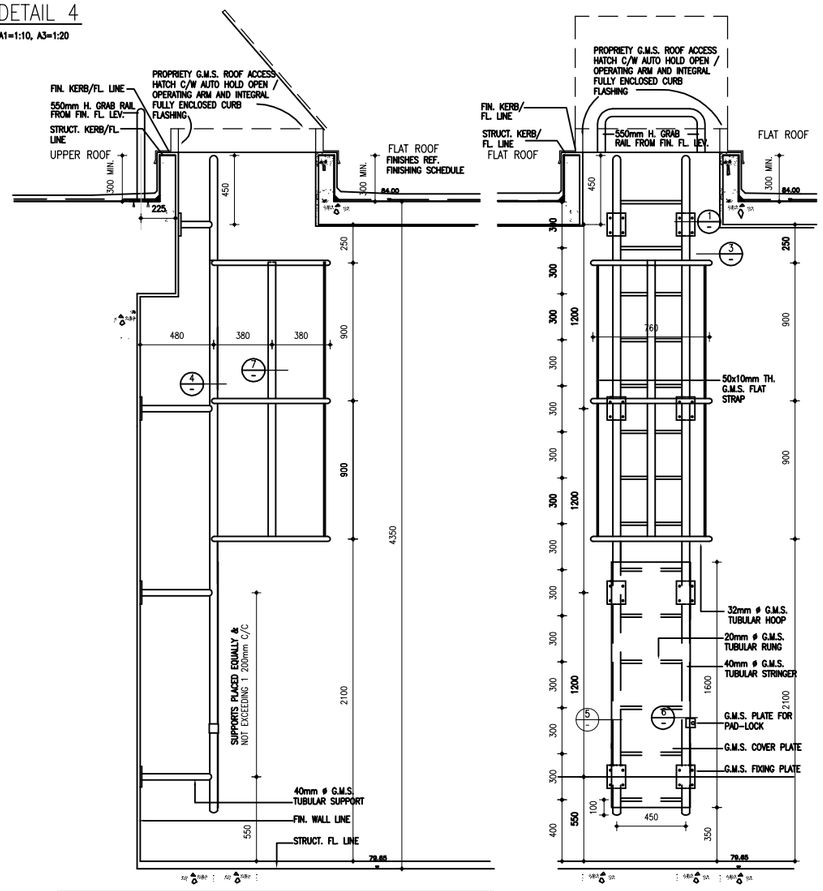

SIDE ELEVATION FRONT ELEVATION

TYPICAL DETAIL OF CAT LADDER 2
A1=1 : 20, A3=1 : 40

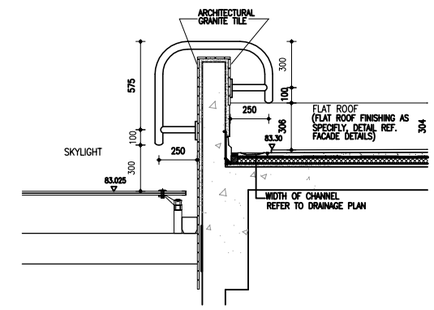

SIDE ELEVATION

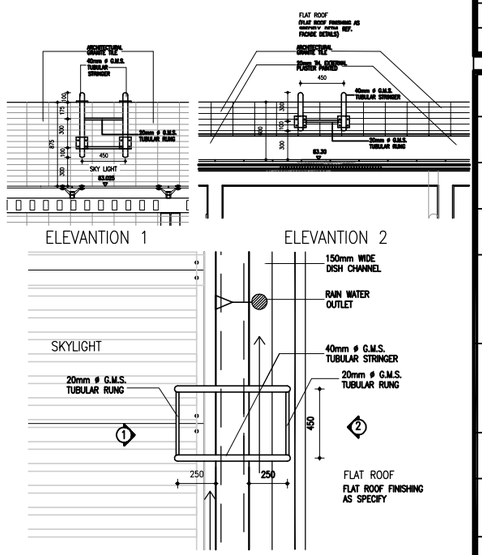

PLAN

TYPICAL DETAIL OF CAT LADDER 3
A1=1 : 20, A3=1 : 40

Notes :

No.	Date	Description	Initial
Revision			

Consultant Project No.
080101

ARTHUR C. S. KWOK
ARCHITECTS & ASSOCIATES LIMITED
郭之燊建築師有限公司
1401 ARGYLE CENTRE ONE KOWLOON

TEAM 73 HK Limited
urban design urban planning landscape architecture
4/F China Hong Kong Tower 8 Hennessy Road Wanchai Hong Kong
Tel: 2865-8713 Fax: 2865-4809 Email: design@team-73.com

CANWEST CONSULTANTS LIMITED
CIVIL & STRUCTURAL ENGINEERS
建偉工程顧問有限公司
10/F, 63A KING'S ROAD, NORTH POINT, HONG KONG
TEL: (852) 2882 1126
FAX: (852) 2881 6385
E-MAIL: canwest@canwest.biz.com.hk

THOMAS ANDERSON & PARTNERS (H.K.) LIMITED
CONSULTING ENGINEERS, BUILDING SERVICES
湯瑪士(香港)有限公司

	Name	Signed	Date
Designed	PT / EL		DEC 2011
Drawn	WS		DEC 2011
Checked	TH		DEC 2011
Approved	AL		DEC 2011

Contract No.
SS T320

File No.

Project No.
420 RO

Consultant Agreement No.
9AS022

Contract
LOCAL OPEN SPACE AT CHUNG YEE STREET, KOWLOON CITY DISTRICT

Drawing Title
CAT LADDER & ROOF ACCESS HATCH DETAILS

Drawing No.
AB/2263/ MS001

Scale
AS SHOWN

(Date)

ARCHITECTURAL SERVICES DEPARTMENT

A1 841 x 594